FLORIDA PRODUCT APPROVAL DRAWINGS FOR SERIES NS213, MS380 AND WS500 BUTT HUNG DOORS

GENERAL NOTES:
SEE FBC APPROVALS FOR USE WITH SIDELITES

TEST STANDARDS
AIR–ASTM E283
FORCED ENTRY–AAMA 1304
STATIC–ASTM E330

DESIGN PRESSURE
+60/–60 PSF

TYPICAL GLASS BITE IS 9/32"
1/4" MIN, SHIM SPACE @ PERIMETER UNLESS OTHERWISE NOTED ALL ALUMINUM EXTRUSIONS SHALL BE MADE OF 6063–T6 ALLOY AND TEMPER

THIS PRODUCT HAS BEEN DESIGNED AND TESTED TO COMPLY WITH FLORIDA BUILDING CODE 2023 EDITION. THIS PRODUCT IS NOT APPROVED FOR USE IN THE HIGH VELOCITY HURRICANE ZONES OR WIND–BORNE DEBRIS REGIONS.

ABBREVIATIONS:
D.L.O. = DAY LIGHT OPENING
TYP. = TYPICAL
D.O. = DOOR OPENING
D.O.W. = DOOR OPENING WIDTH
D.O.H. = DOOR OPENING HEIGHT

APPLICABLE SYSTEMS:
DETAILS SHOW THE DOORS INSTALLED IN FL200 SYSTEM FOR REFERENCE ONLY. THE DOORS ARE ACCEPTABLE TO BE INSTALLED INTO THE FL200, FL300, FL300T, FS400T, PW250 AND PW251.

INDEX TO DRAWINGS

1	INDEX TO DRAWINGS AND NOTES
2	TYPICAL ELEVATION NON–TRANSOM
3	TYPICAL ELEVATION WITH TRANSOM
4	CONCRETE ANCHOR CHART
5	LIGHT GAUGE STEEL STUD ANCHOR CHART
6	HOT ROLLED STEEL STUD ANCHOR CHART
7	WOOD ANCHOR CHART
8	DETAIL WITH AND WITHOUT TRANSOM
9	DETAIL WITH AND WITHOUT TRANSOM
10	DETAILS JAMBS
11	DETAILS MEETING STILES
12	BILL OF MATERIALS AND APPROVED HARDWARE
13	DIE DRAWINGS

JOSHUA M. ROYCE
LICENSE
No. 68180
STATE OF FLORIDA
PROFESSIONAL ENGINEER

Secure Electronic Seal
For Electronic Submissions

Digitally signed by: Josh Royce
09:57:10-05'

REV	BY	DATE	DESCRIPTION
---	---	---	---

Coral Architectural Products
3010 RICE MINE ROAD, TUSCALOOSA, AL 35406
PHONE: 800-772-7737 FAX: 800-255-7320

FLORIDA PRODUCT APPROVAL
DRAWINGS SERIES 213, 380 AND 500
BUTT HUNG DOORS IN FL200

INDEX TO DRAWINGS AND NOTES

DATE		
7/7/15		
DRAWN DEG	CHECKED JMR	APPROVED JMR
PROJECT NO.		
DRAWING NO. FL200_3		
SHEET 1 OF 13		

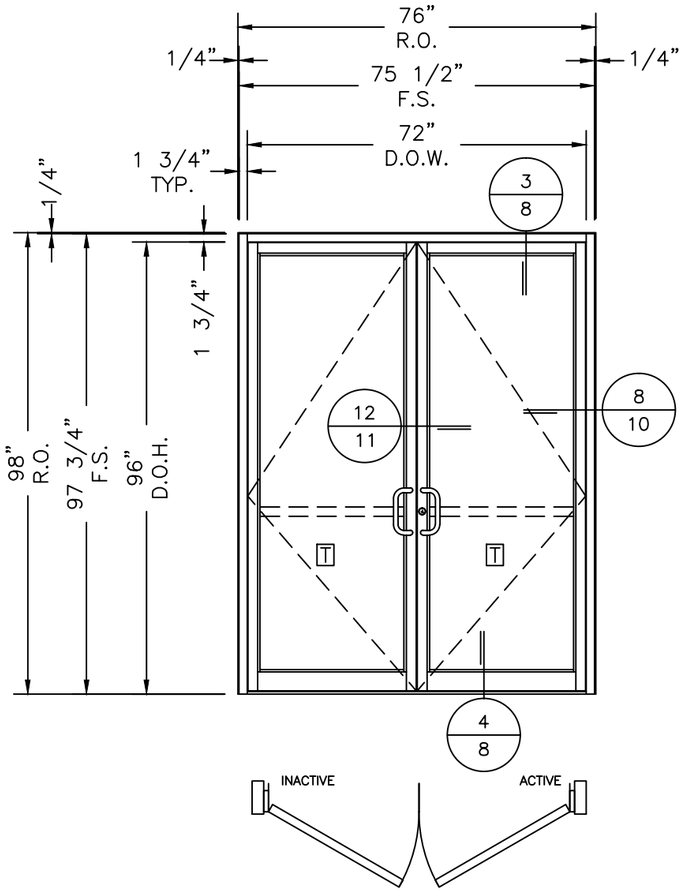

NS213

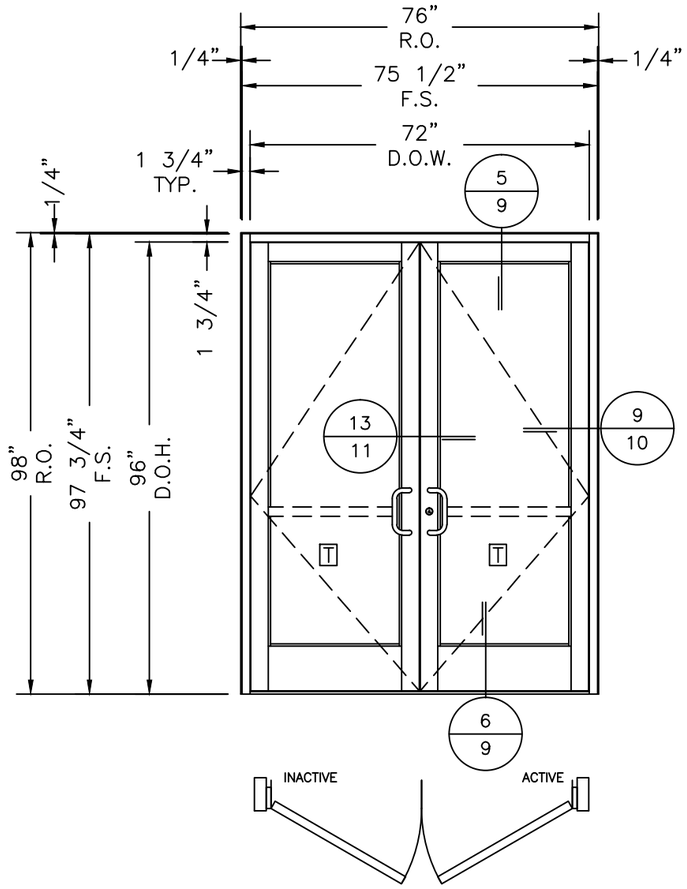

MS380

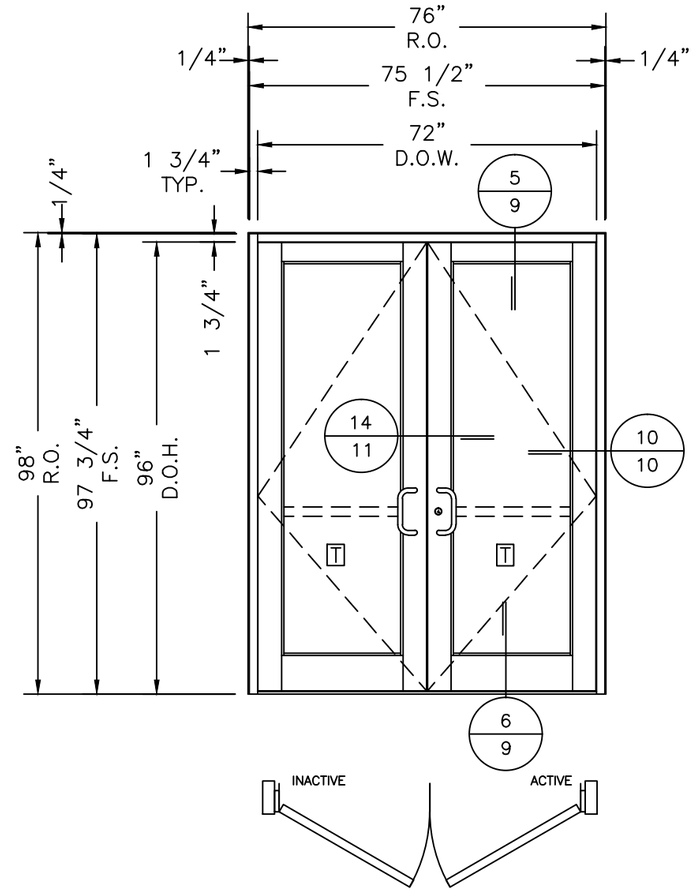

WS500

ELEVATION E1
SERIES NS213, MS380 AND WS500
DOORS IN FL200 FRAMING
WITH 1-1/2 PAIR BUTT HINGES

DESIGN PRESSURE = +60/−60 PSF

DOOR GLASS SIZE = D.L.O. + 9/16"
THESE DOORS WERE NOT TESTED FOR
WATER INFILTRATION

GLASS TYPE
T 1/4" TEMPERED GLASS

JOSHUA M. ROYCE
LICENSE
No. 68180
STATE OF
FLORIDA
PROFESSIONAL ENGINEER

Secure Electronic Seal
For Electronic Submissions

Digitally Signed by: Josh Royce

REV	BY	DATE	DESCRIPTION
---	---	---	---

Coral
Architectural Products
3010 RICE MINE ROAD, TUSCALOOSA, AL 35406
PHONE: 800-772-7737 FAX: 800-255-7320

FLORIDA PRODUCT APPROVAL
DRAWINGS SERIES 213, 380 AND 500
BUTT HUNG DOORS IN FL200

TYPICAL ELEVATION NON-TRANSOM

DATE		
7/7/15		
DRAWN	CHECKED	APPROVED
DEG	JMR	JMR

PROJECT NO.

DRAWING NO.
FL200_3

SHEET 2 OF 13

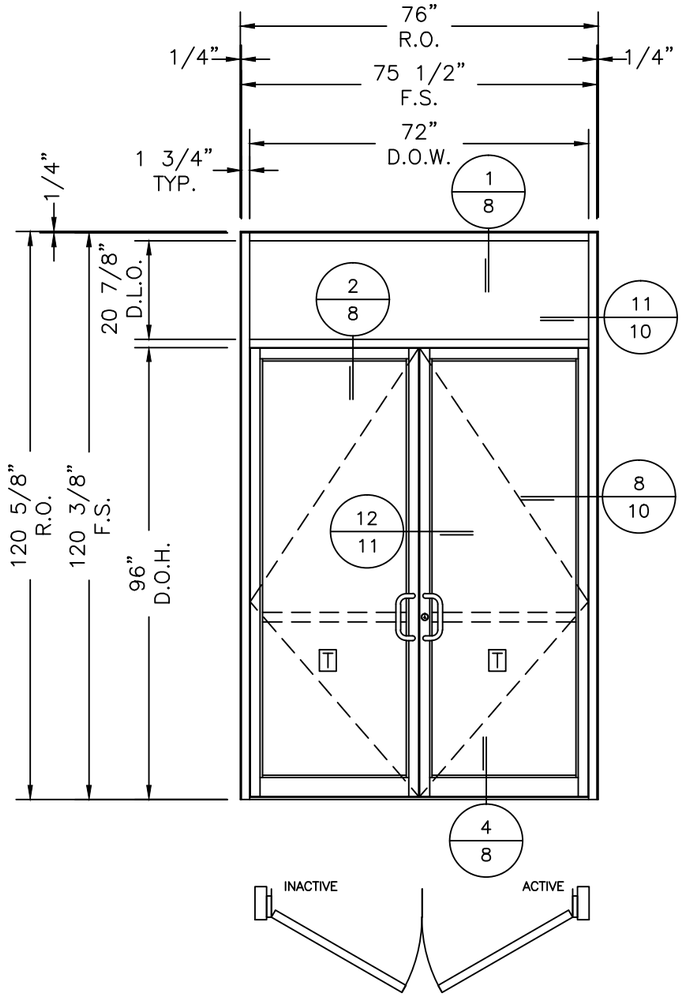

NS213

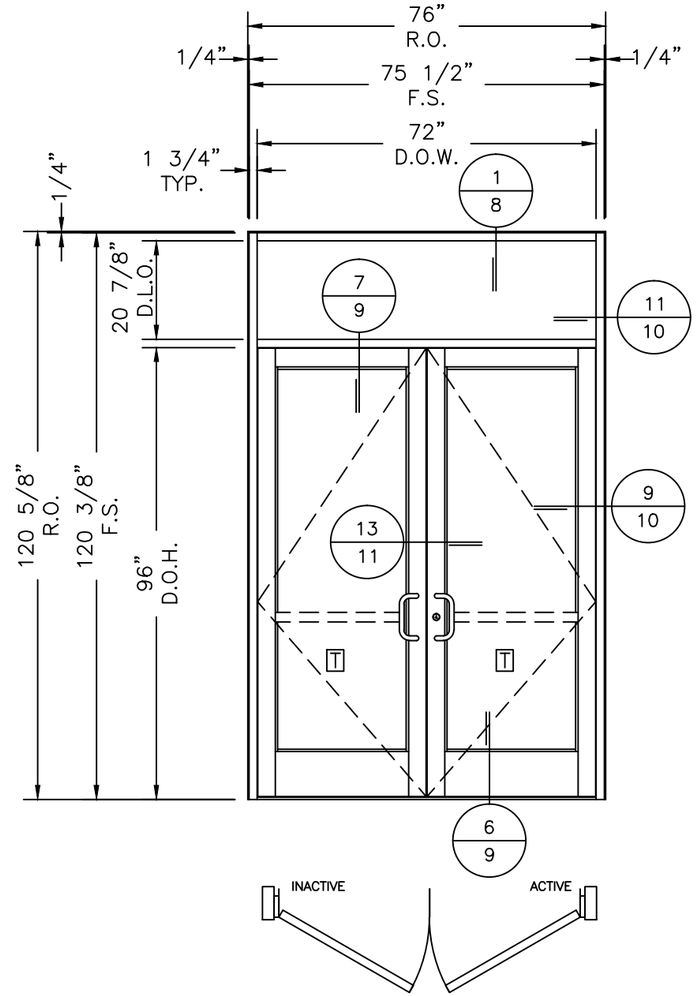

MS380

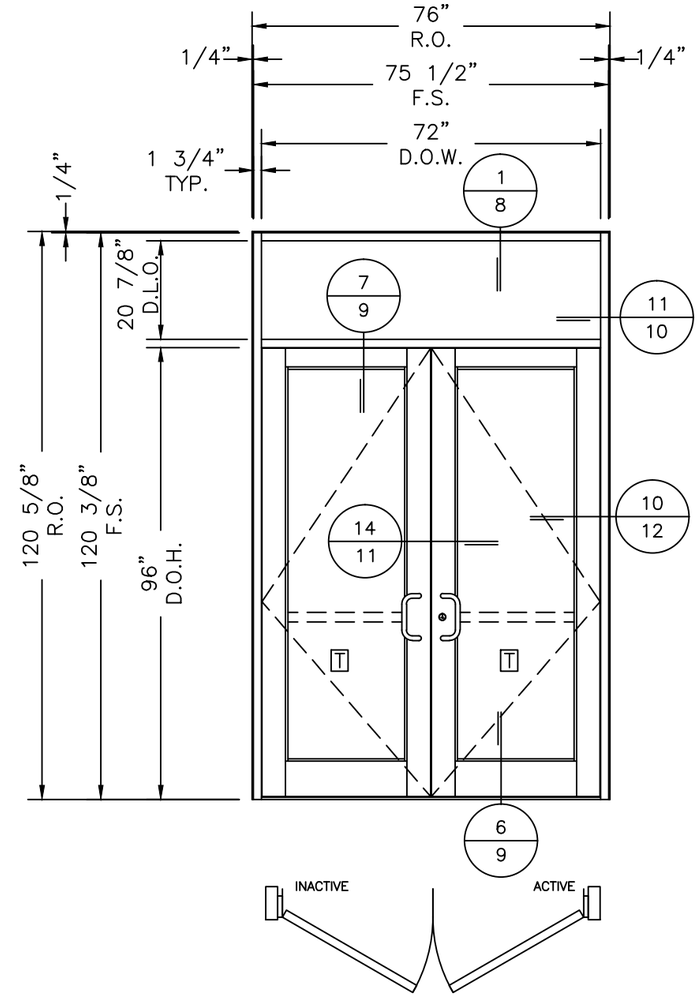

WS500

ELEVATION E2
SERIES NS213, MS380 AND WS500
DOORS IN FL200 FRAMING WITH
TRANSOM WITH 1-1/2 PAIR BUTT
HINGES

DESIGN PRESSURE = +60/−60 PSF

DOOR GLASS SIZE = D.L.O. + 9/16"
THESE DOORS WERE NOT TESTED FOR
WATER INFILTRATION

GLASS TYPE
T 1/4" TEMPERED GLASS

REV	BY	DATE	DESCRIPTION
--	--	----	----------

Coral Architectural Products
3010 RICE MINE ROAD, TUSCALOOSA, AL 35406
PHONE: 800-772-7737 FAX: 800-255-7320

FLORIDA PRODUCT APPROVAL
DRAWINGS SERIES 213, 380 AND 500
BUTT HUNG DOORS IN FL200

TYPICAL ELEVATION WITH TRANSOM

JOSHUA M. ROYCE
LICENSE
No. 68180
STATE OF FLORIDA
PROFESSIONAL ENGINEER

Secure Electronic Seal
For Electronic Submissions

Digitally Signed by: Josh Royce

DATE		
7/7/15		
DRAWN	CHECKED	APPROVED
DEG	JMR	JMR
PROJECT NO.		
DRAWING NO. FL200_3		
SHEET 3 OF 13		

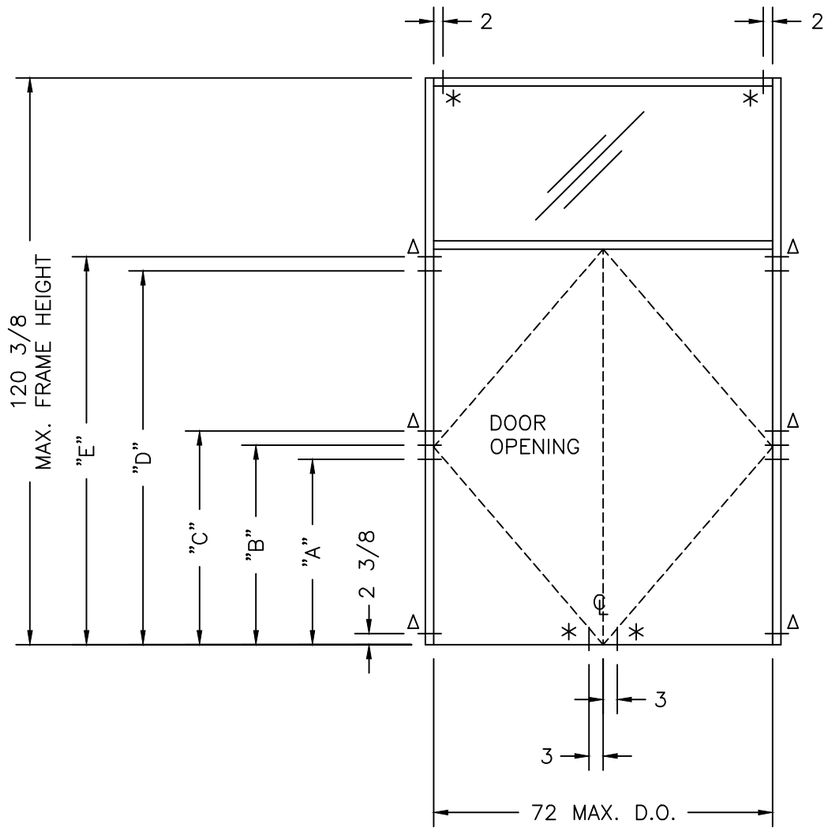

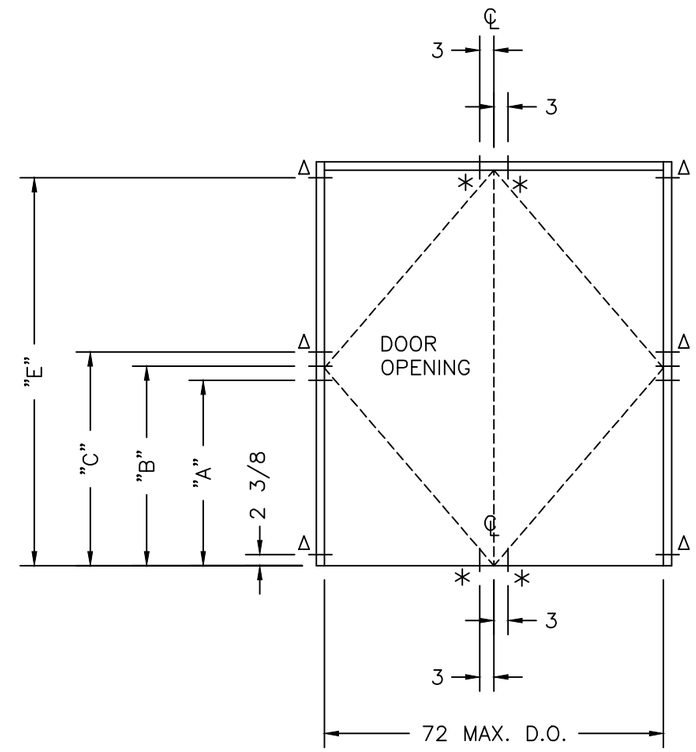

TYPICAL INSTALLATION INTO CONCRETE SUBSTRATE. MIN. 2500 P.S.I.

EACH LINE REPRESENTS ONE FASTENER

FASTENER LEGEND

Δ 1/4" TAPCON
1 3/4" MIN. EMBEDMENT
WITH FILLER PLATE FULL
LENGTH OF MULLION.
3" MIN. SPACING.

* 1/4" TAPCON
1 3/4" MIN. EMBEDMENT.

STANDARD LENGTHS					
D.O. HEIGHT	"A"	"B"	"C"	"D"	"E"
84"	39 3/8"	42 3/8"	45 3/8"	79 3/8"	82 3/8"
96"	45 3/8"	48 3/8"	51 3/8"	91 3/8"	94 3/8"

REV	BY	DATE	DESCRIPTION
---	---	---	---

Coral Architectural Products
3010 RICE MINE ROAD, TUSCALOOSA, AL 35406
PHONE: 800-772-7737 FAX: 800-255-7320

FLORIDA PRODUCT APPROVAL
DRAWINGS SERIES 213, 380 AND 500
BUTT HUNG DOORS IN FL200

CONCRETE ANCHOR CHART

JOSHUA M. ROYCE
LICENSE
No. 68180
STATE OF FLORIDA
PROFESSIONAL ENGINEER

Secure Electronic Seal
For Electronic Submissions

DATE		
7/7/15		
DRAWN DEG	CHECKED JMR	APPROVED JMR
PROJECT NO.		
DRAWING NO. FL200_3		
SHEET 4 OF 13		

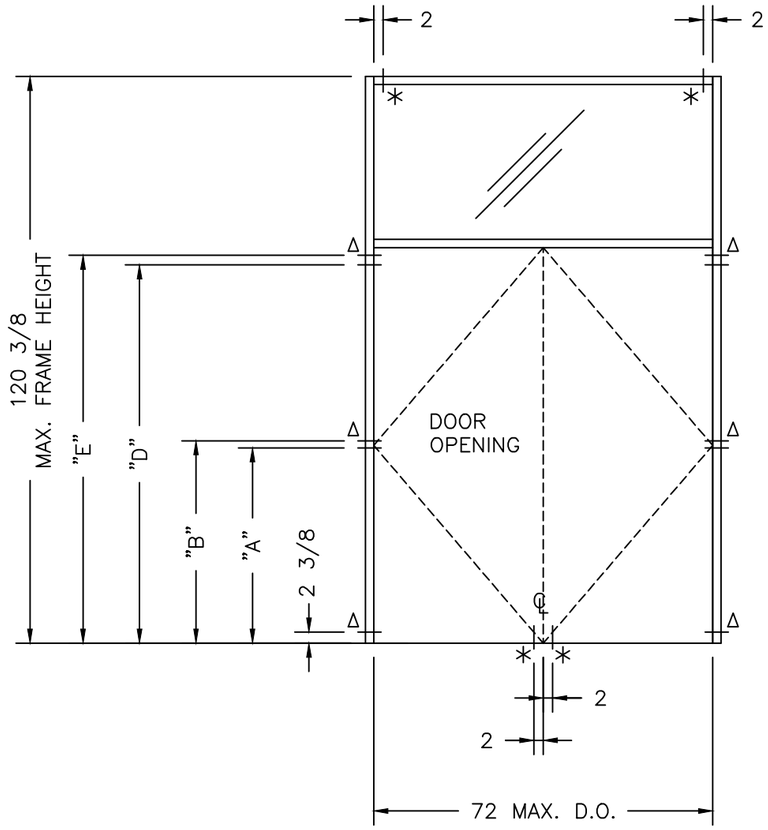

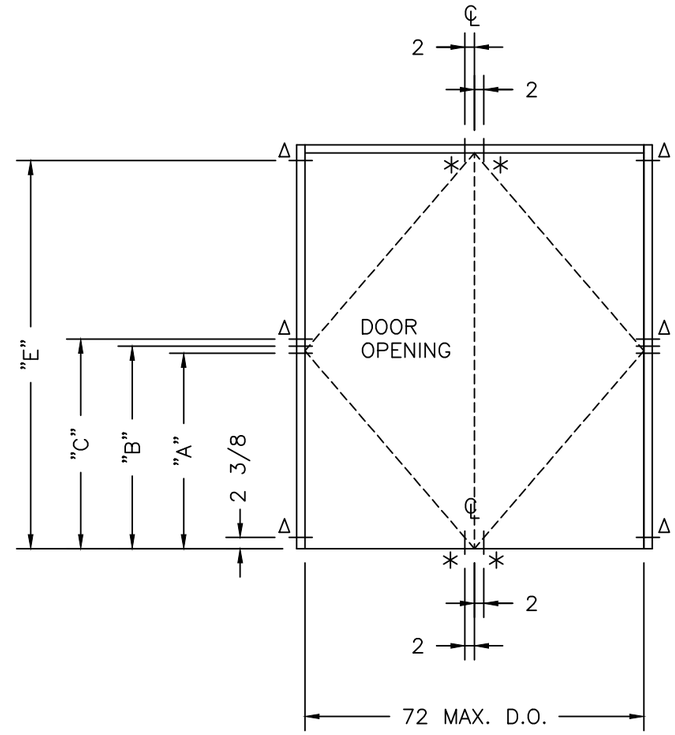

TYPICAL INSTALLATION INTO LIGHT GAUGE STEEL SUBSTRATE MIN. 18 GAUGE

EACH LINE REPRESENTS ONE FASTENER

FASTENER LEGEND

Δ 1/4" TEK ANCHOR WITH FILLER PLATE FULL LENGTH OF MULLION. 1 1/2" MIN. SPACING.

* 1/4" TEK ANCHOR

STANDARD LENGTHS					
D.O. HEIGHT	"A"	"B"	"C"	"D"	"E"
84"	41 1/2"	43"	44 1/2"	79 3/8"	82 3/8"
96"	47 1/2"	49"	50 1/2"	91 3/8"	94 3/8"

JOSHUA M. ROYCE LICENSE No. 68180 STATE OF FLORIDA PROFESSIONAL ENGINEER

Secure Electronic Seal For Electronic Submissions

Digitally Signed by Josh Royce

REV	BY	DATE	DESCRIPTION
---	---	----	----------

Coral Architectural Products
3010 RICE MINE ROAD, TUSCALOOSA, AL 35406
PHONE: 800-772-7737 FAX: 800-255-7320

FLORIDA PRODUCT APPROVAL
DRAWINGS SERIES 213, 380 AND 500
BUTT HUNG DOORS IN FL200
LIGHT GAUGE STEEL STUD
ANCHOR CHART

DATE 7/7/15

DRAWN	CHECKED	APPROVED
DEG	JMR	JMR

PROJECT NO.

DRAWING NO. FL200_3

SHEET 5 OF 13

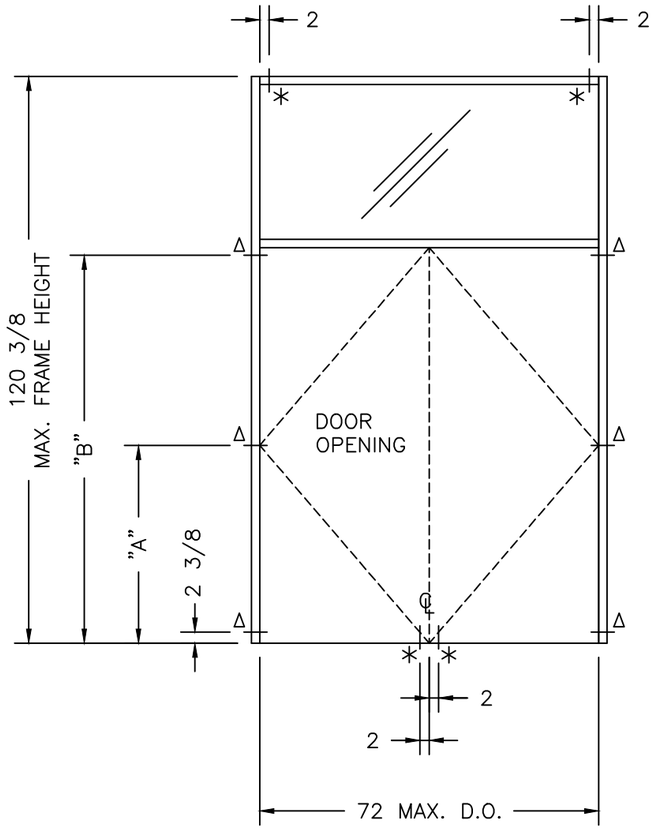

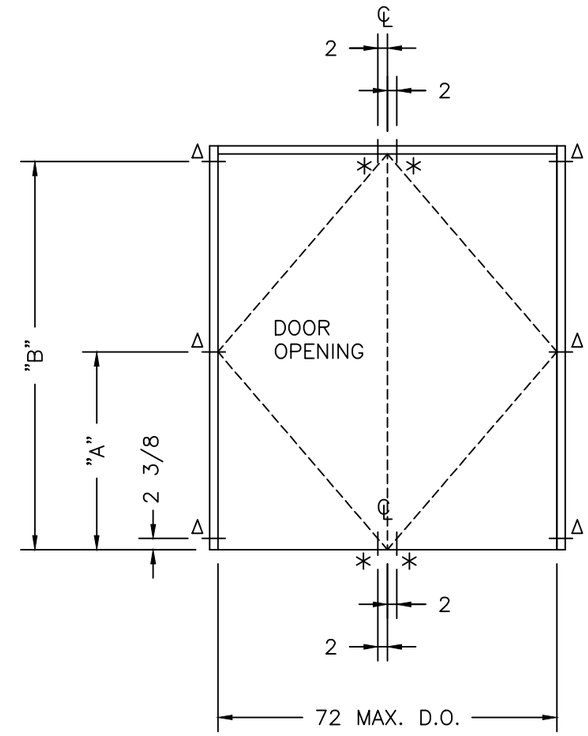

EACH LINE REPRESENTS ONE FASTENER

FASTENER LEGEND

Δ 3/8"ø HEX HEAD BOLT WITH FILLER PLATE FULL LENGTH OF MULLION. 1 1/2" MIN. SPACING.

* 3/8"ø HEX HEAD BOLT

TYPICAL INSTALLATION INTO HOT ROLLED STEEL SUBSTRATE MIN. 1/8" THICK

STANDARD LENGTHS		
D.O. HEIGHT	"A"	"B"
84"	42 1/4"	82 3/8"
96"	48 1/4"	94 3/8"

REV	BY	DATE	DESCRIPTION
---	---	----	----------

Coral Architectural Products
3010 RICE MINE ROAD, TUSCALOOSA, AL 35406
PHONE: 800-772-7737 FAX: 800-255-7320

FLORIDA PRODUCT APPROVAL
DRAWINGS SERIES 213, 380 AND 500
BUTT HUNG DOORS IN FL200
HOT ROLLED STEEL STUD
ANCHOR CHART

JOSHUA M. ROYCE LICENSE No. 68180 STATE OF FLORIDA PROFESSIONAL ENGINEER

Secure Electronic Seal For Electronic Submissions

Digitally Signed by Josh Royce

DATE		
7/7/15		
DRAWN	CHECKED	APPROVED
DEG	JMR	JMR

PROJECT NO.

DRAWING NO. FL200_3

SHEET 6 OF 13

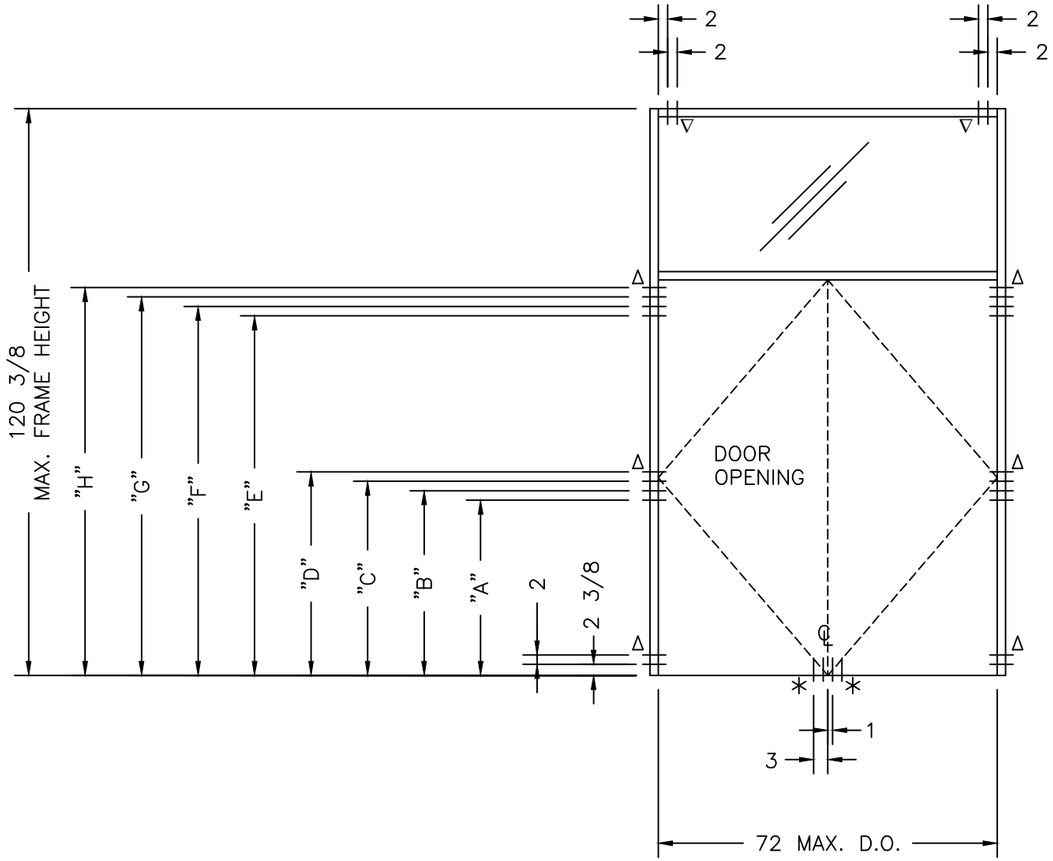

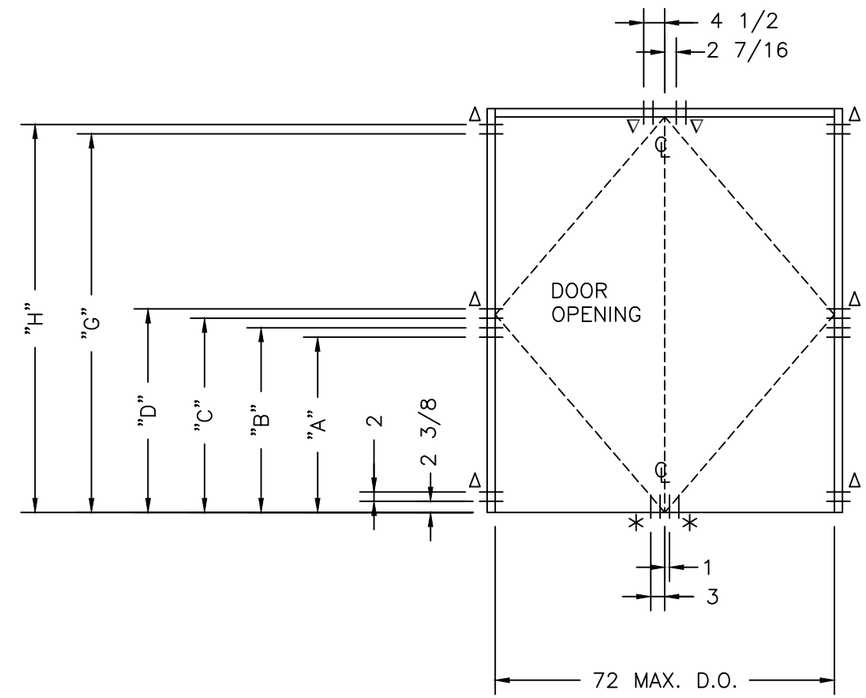

TYPICAL INSTALLATION INTO WOOD SUBSTRATE SOUTHERN PINE

EACH LINE REPRESENTS ONE FASTENER

FASTENER LEGEND

Δ 1/4" WOOD SCREWS
1 3/4" MIN. EMBEDMENT
WITH FILLER PLATE FULL
LENGTH OF MULLION.
2" MIN. SPACING.

∇ 1/4" WOOD SCREWS
1 3/4" MIN. EMBEDMENT.
2" MIN. SPACING.

* 1/4" WOOD SCREWS
2 1/2" MIN. EMBEDMENT.

STANDARD LENGTHS									
D.O. HEIGHT	"A"	"A1"	"B"	"C"	"D"	"E"	"F"	"G"	"H"
84"	37 1/4"	39 1/4"	41 1/4"	43 1/4"	45 1/4"	76 3/8"	78 3/8"	80 3/8"	82 3/8"
96"	42 1/4"	44 1/4"	46 1/4"	48 1/4"	50 1/4"	88 3/8"	90 3/8"	92 3/8"	94 3/8"

JOSHUA M. ROYLE
LICENSE
No. 68180
STATE OF FLORIDA
PROFESSIONAL ENGINEER

Secure Electronic Seal
For Electronic Submissions

Digitally Signed by Josh Royle

REV	BY	DATE	DESCRIPTION
---	---	---	---

Coral Architectural Products
3010 RICE MINE ROAD, TUSCALOOSA, AL 35406
PHONE: 800-772-7737 FAX: 800-255-7320

FLORIDA PRODUCT APPROVAL
DRAWINGS SERIES 213, 380 AND 500
BUTT HUNG DOORS IN FL200

WOOD ANCHOR CHART

DATE		
7/7/15		
DRAWN	CHECKED	APPROVED
DEG	JMR	JMR
PROJECT NO.		
DRAWING NO. FL200_3		
SHEET 7 OF 13		

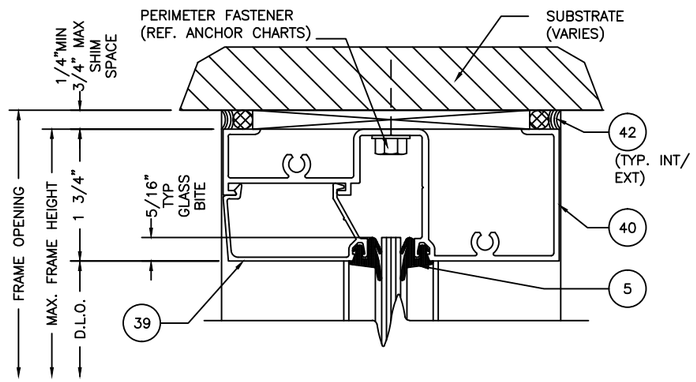

1/8 TRANSOM HEAD
SCALE: 1:2

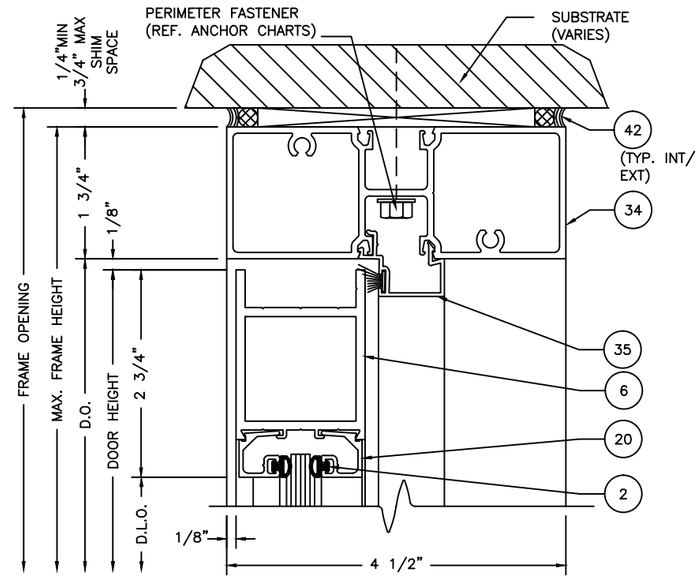

3/8 NS DOOR HEADER
SCALE: 1:2

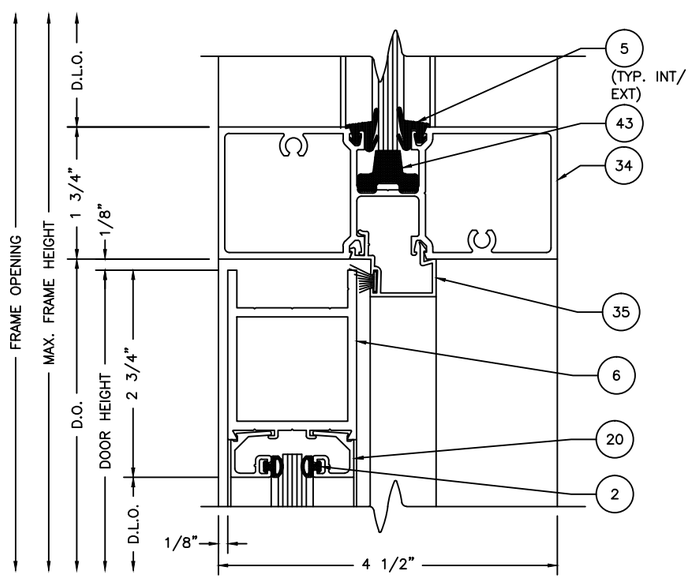

2/8 NS INT DOOR HEADER
SCALE: 1:2

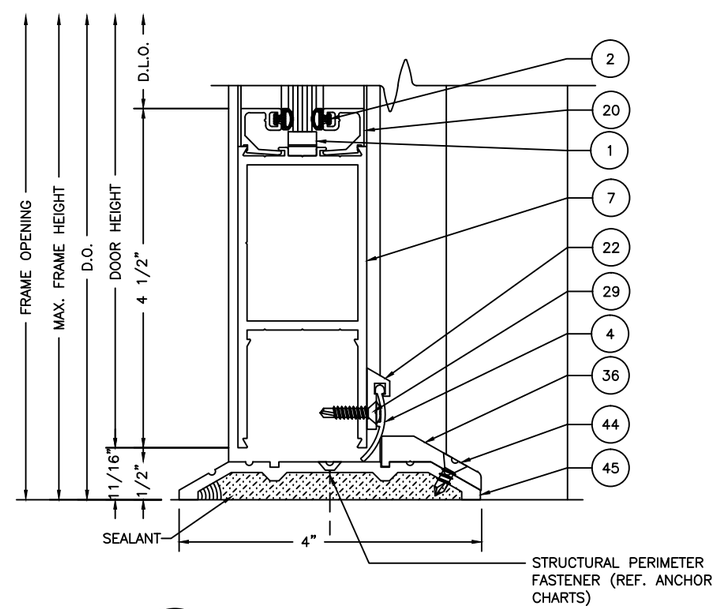

4/8 NS THRESHOLD
SCALE: 1:2

REV	BY	DATE	DESCRIPTION
--	--	----	----------

Coral Architectural Products
3010 RICE MINE ROAD, TUSCALOOSA, AL 35406
PHONE: 800-772-7737 FAX: 800-255-7320

FLORIDA PRODUCT APPROVAL
DRAWINGS SERIES 213, 380 AND 500
ENTRANCE DOORS IN FL200
FRAMING

DETAIL WITH AND WITHOUT TRANSOM

JOSHUA M. ROYCE
LICENSE
No. 68180
STATE OF FLORIDA
PROFESSIONAL ENGINEER

Secure Electronic Seal
For Electronic Submissions

Digitally Signed by: Josh Royce

DATE		
7/7/15		
DRAWN	CHECKED	APPROVED
DEG	JMR	JMR

PROJECT NO.

DRAWING NO.
FL200_3

SHEET 8 OF 13

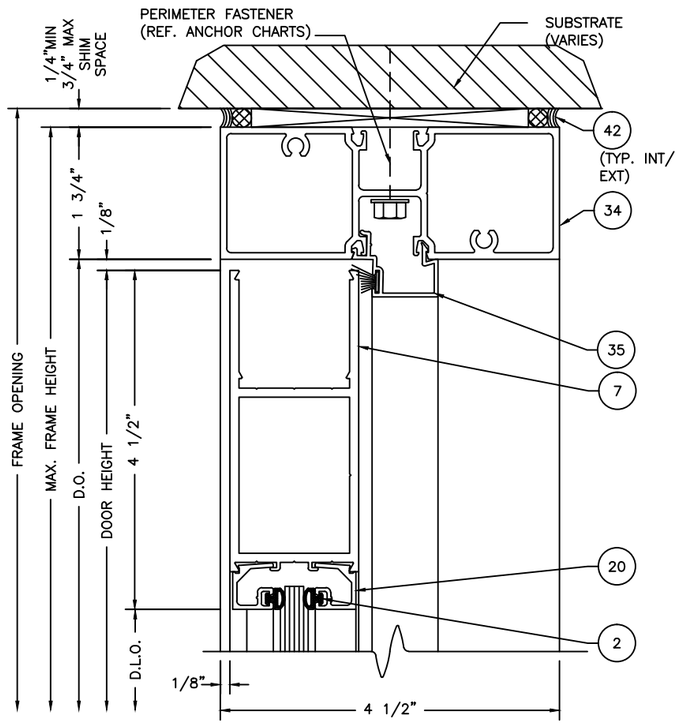

5/9 MS & WS DOOR HEADER

SCALE: 1:2

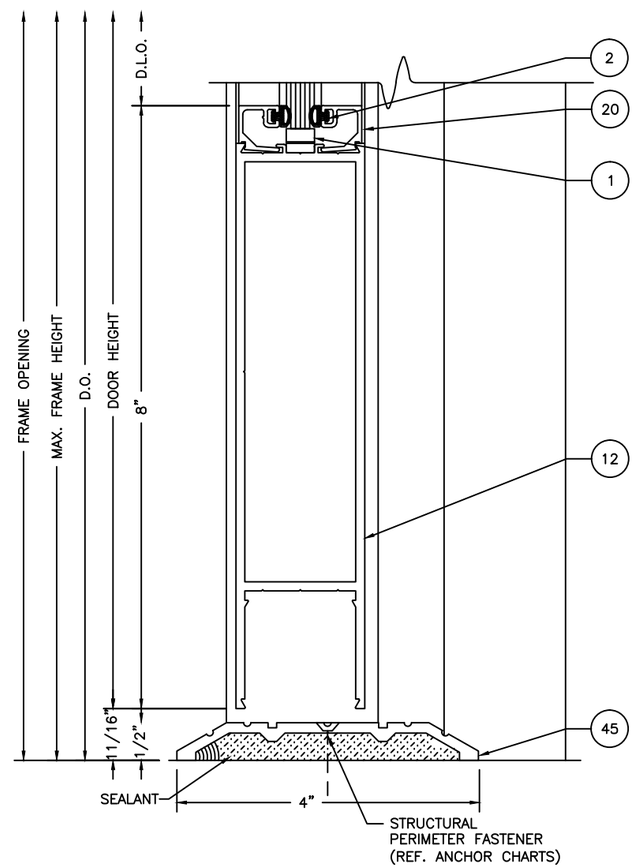

6/8 MS & WS THRESHOLD

SCALE: 1:2

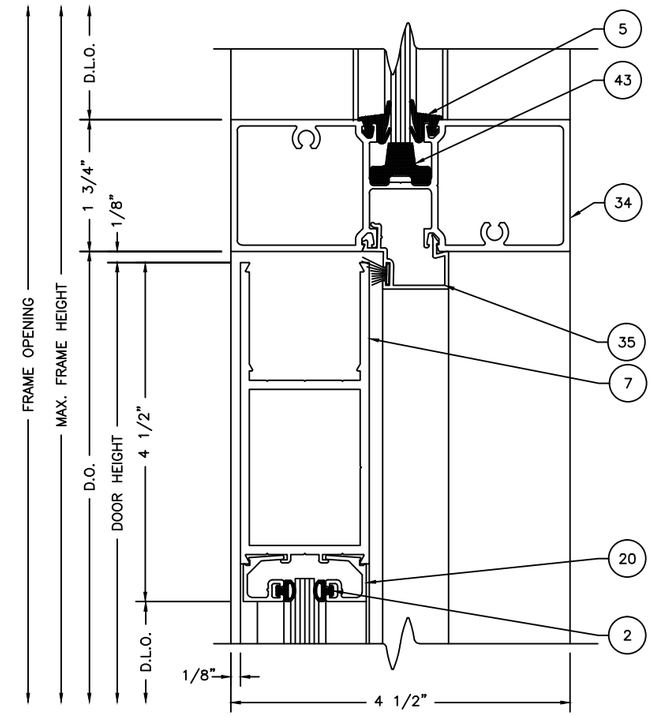

7/8 MS & WS INT DOOR HEADER

SCALE: 1:2

REV	BY	DATE	DESCRIPTION
---	---	---	---

Coral Architectural Products

3010 RICE MINE ROAD, TUSCALOOSA, AL 35406
PHONE: 800-772-7737 FAX: 800-255-7320

FLORIDA PRODUCT APPROVAL
DRAWINGS SERIES 213, 380 AND 500
ENTRANCE DOORS IN FL200
FRAMING

DETAIL WITH AND WITHOUT TRANSOM

JOSHUA M. ROYCE
LICENSE
No. 68180
STATE OF FLORIDA
PROFESSIONAL ENGINEER

Secure Electronic Seal
For Electronic Submissions

Digitally Signed by Josh Royce

DATE		
7/7/15		
DRAWN	CHECKED	APPROVED
DEG	JMR	JMR

PROJECT NO.

DRAWING NO.
FL200_3

SHEET 9 OF 13

7 / 8 MS & WS INT DOOR HEADER
SCALE: 1:2

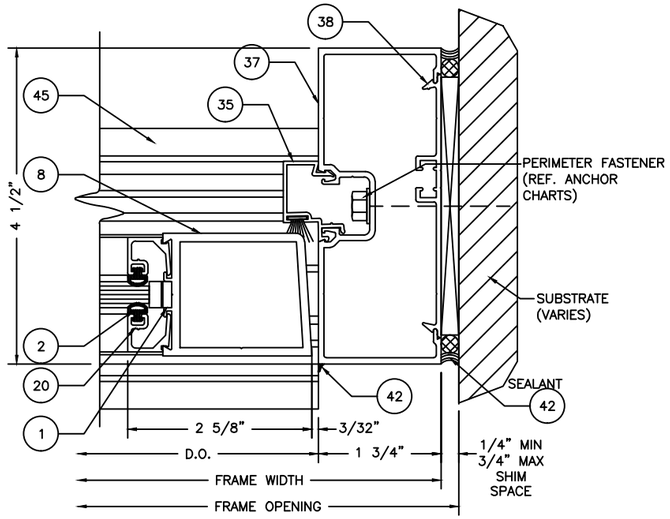

8 / 10 NS JAMB
SCALE: 1:2

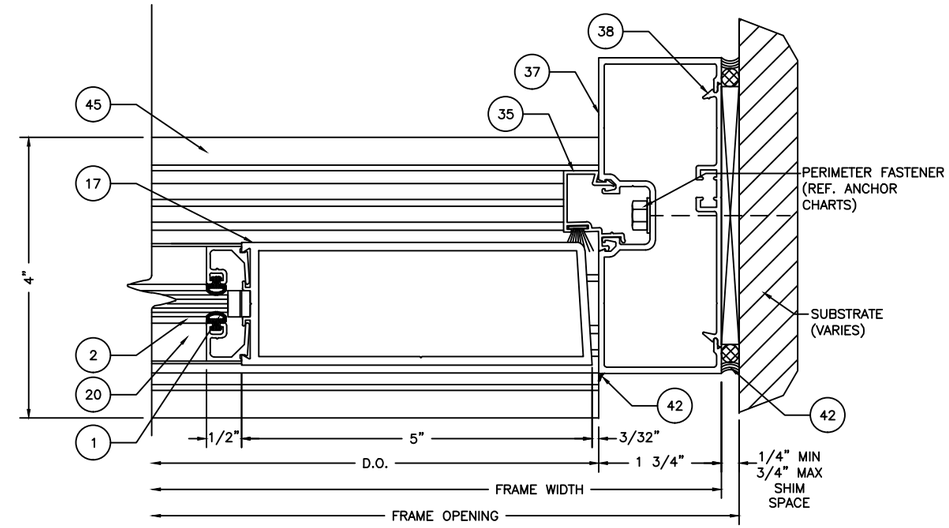

10 / 10 WS DOOR JAMB
SCALE: 1:2

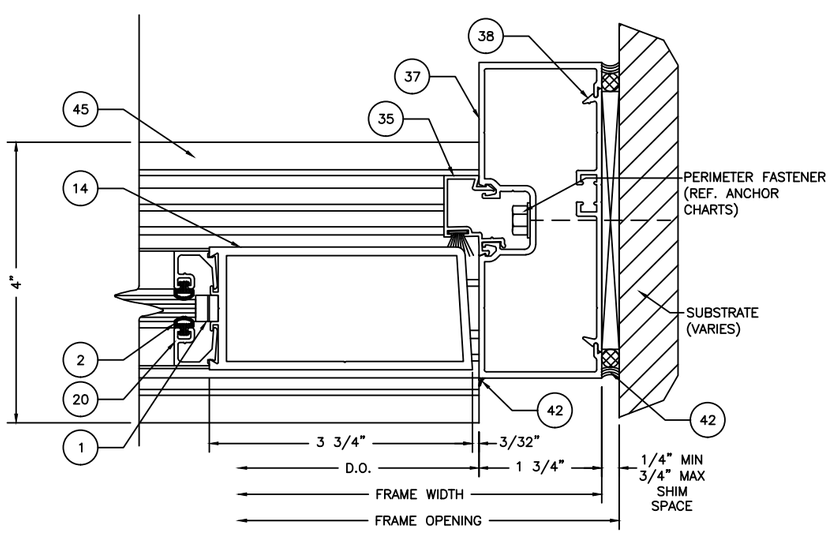

9 / 10 MS DOOR JAMB
SCALE: 1:2

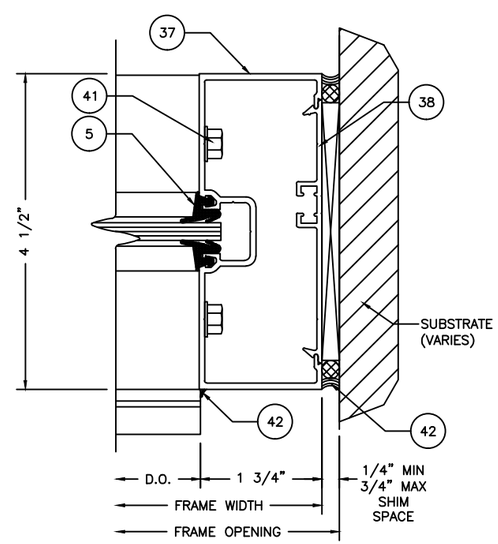

11 / 10 TRANS JAMB
SCALE: 1:2

DESCRIPTION	DATE	BY	REV

Coral Architectural Products
3010 RICE MINE ROAD, TUSCALOOSA, AL 35406
PHONE: 800-772-7737 FAX: 800-255-7320

FLORIDA PRODUCT APPROVAL
DRAWINGS SERIES 213, 380 AND 500
ENTRANCE DOORS IN FL200
FRAMING

DETAILS JAMBS

JOSHUA M. ROYCE
LICENSE
No. 68180
STATE OF FLORIDA
PROFESSIONAL ENGINEER

Secure Electronic Seal
For Electronic Submissions

Digitally Signed by: Josh Royce

7/7/15

CHECKED	APPROVED
JMR	JMR

NO.

NO.
L200_3

10 OF 13

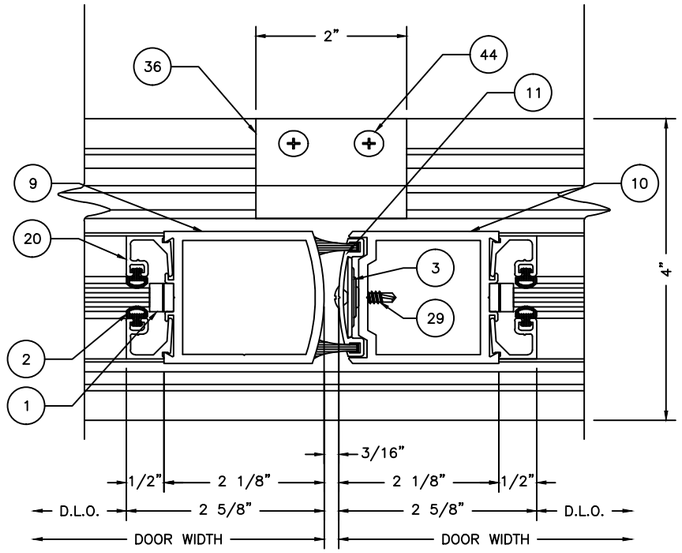

12 / 11 NS MEETING STILES
SCALE: 1:2

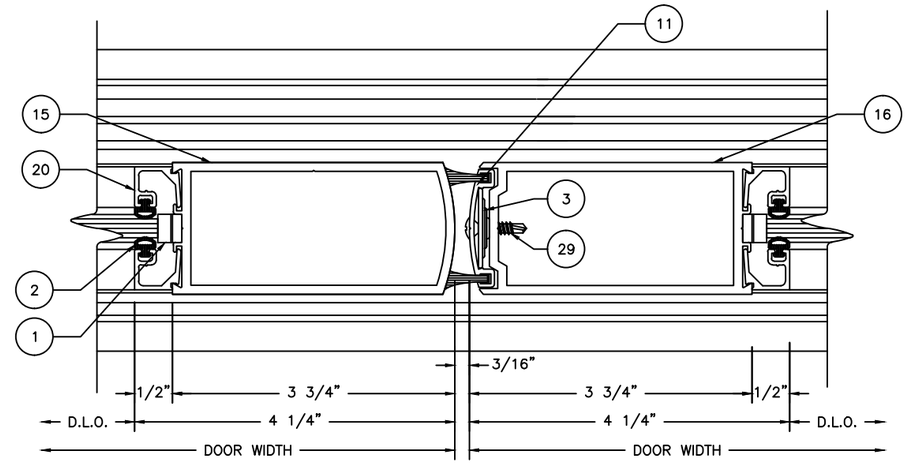

13 / 11 MS MEETING STILES
SCALE: 1:2

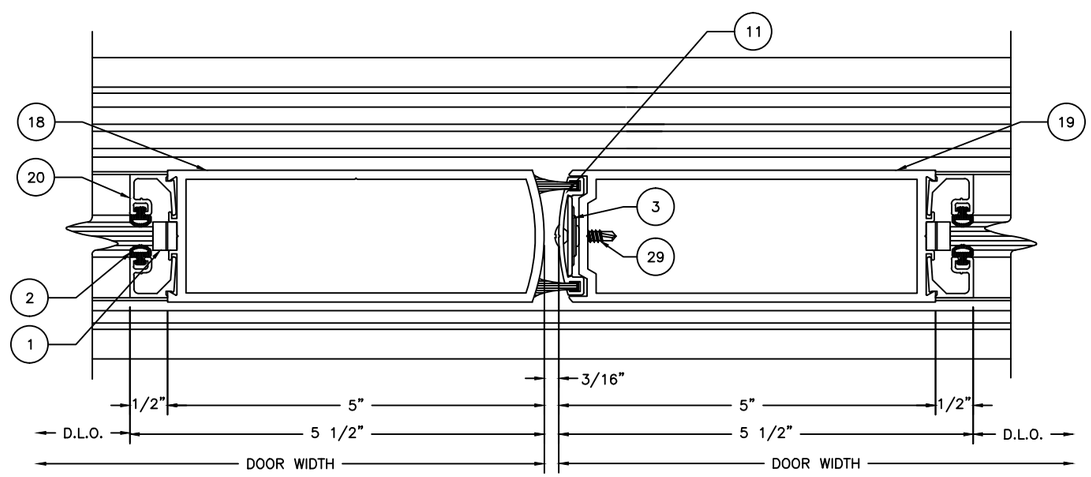

14 / 11 WS MEETING STILES
SCALE: 1:2

REV	BY	DATE	DESCRIPTION
---	---	----	----------

Coral Architectural Products
3010 RICE MINE ROAD, TUSCALOOSA, AL 35406
PHONE: 800-772-7737 FAX: 800-255-7320

FLORIDA PRODUCT APPROVAL
DRAWINGS SERIES 213, 380 AND 500
ENTRANCE DOORS IN FL200
FRAMING

DETAILS MEETING STILES

JOSHUA M. ROYCE
LICENSE
No. 68180
STATE OF FLORIDA
PROFESSIONAL ENGINEER

Secure Electronic Seal
For Electronic Submissions

Digitally signed by: Josh Royce

DATE		
7/7/15		
DRAWN	CHECKED	APPROVED
DEG	JMR	JMR

PROJECT NO.

DRAWING NO.
FL200_3

SHEET 11 OF 13

BILL OF MATERIALS

ITEM	P/N	DESCRIPTION	DIMENSIONS	MATERIAL	MANUFACTURER	NOTES
1	SB1	INJECTION MOLDED SIDE/SETTING BLOCK	.994 X .317 X .381	ABS PLASTIC	CORAL	3 EACH PER DOOR
2	NG4	DOOR GLASS STOP WEATHERING	.260 SPACE	EPDM	VARIES	
3	SP100	ADJUSTABLE ASRAGAL SPRING	VARIABLE SPACE	ALUM	VARIES	USED @ 11
4	VG1	BOOTOM DOOR SWEEP WEATHERING	VARIABLE SPACE	VINYL	CORAL	USED @ 22
5	NG1	GLAZING GASKET	.197 SPACE	EPDM	VARIES	USED ON INTERIOR AND EXTERIOR
6	D101	TOP RAIL NS213	2.25 X 1.71 X .120	6063-T6 ALUMINUM	CORAL	
7	D102	BOTTOM RAIL NS213/TOP RAIL SERIES 380/500	4.00 X 1.71 X .120	6063-T6 ALUMINUM	CORAL	
8	D103	HINGE/ LOCK STILE NS213	2.125 X 1.75 X .120	6063-T6 ALUMINUM	CORAL	
9	D104	INACTIVE MEETING STILE NS213	2.125 X 1.75 X .120	6063-T6 ALUMINUM	CORAL	
10	D105	ACTIVE MEETING STILE NS213	1.989 X 1.75 X .120	6063-T6 ALUMINUM	CORAL	
11	D106	ADJUSTABLE ASTRAGAL ASS'Y-ALL SERIES	.331 X 1.562 X .062	6063-T6 ALUMINUM	CORAL	
12	D108	BOTTOM RAIL MS380 & WS500	7.5 X 1.71 X .120	6063-T6 ALUMINUM	CORAL	
13	NA	NOT USED				
14	D110	HINGE/LOCK STILE MS380	3.75 x 1.75 x .120	6063-T6 ALUMINUM	CORAL	
15	D111	INACTIVE MEETING STILE MS380	3.75 x 1.75 x .120	6063-T6 ALUMINUM	CORAL	
16	D112	ACTIVE MEETING STILE MS380	3.164 x 1.75 x .120	6063-T6 ALUMINUM	CORAL	
17	D118	HINGE/ LOCK STILE WS500	5.00 x 1.75 x .120	6063-T6 ALUMINUM	CORAL	
18	D119	INACTIVE MEETING STILE WS500	5.00 x 1.75 x .120	6063-T6 ALUMINUM	CORAL	
19	D120	ACTIVE MEETING STILE WS500	4.864 x 1.75 x .120	6063-T6 ALUMINUM	CORAL	
20	DG100	DOOR GLASS STOP FOR 1/4" GLAZING	.500 x .539 x .055	6063-T6 ALUMINUM	CORAL	
21	WP106	ADJUSTABLE ASRAGAL WEATHERING	VARIABLE SPACE	WOOL PILE	SCHLEGEL	USED @ 11
22	WS136	DOOR BOTTOM RAIL ASSEMBLY	.302 x .812 x .125	6063-T6 ALUMINUM	CORAL	
23	CB101	DOOR CORNER BLOCK	1.540 x 2.13 x .250	6063-T6 ALUMINUM	CORAL	FABRICATED CUT LENGTH = 1.350" FROM D114
24	CB102	DOOR CORNER BLOCK	1.540 x 2.13 x .250	6063-T6 ALUMINUM	CORAL	FABRICATED CUT LENGTH = 3.032" FROM D114
25	CB108	DOOR CORNER BLOCK	1.540 x 2.13 x .250	6063-T6 ALUMINUM	CORAL	FABRICATED CUT LENGTH = 5.33" FROM D114
26	CB109	DOOR CORNER BLOCK	1.540 x 2.13 x .250	6063-T6 ALUMINUM	CORAL	FABRICATED CUT LENGTH = 7.513" FROM D114
27	AS1	ATTACH RAILS TO CORNER BLOCK	#10 X 3/4" PFH TYPE "B"	STEEL	VARIES	
28	AS4	ATTACH CORNER BLOCK TO STILES	3/8"-16 X 1" HWH CAP BOLT	STEEL	VARIES	
29	AS7	ATTACH ADJUSTABLE ASTRAGAL	#8 X3/4" POH SELF DRILLING	STEEL	VARIES	
30	AS13	STEEL SQUARE NUT FOR AS4	1.475 X 1.475 X .180	ZINC PLATED STL.	VARIES	
31	BP213	STEEL BACK-UP PLATE/ FLUSH BOLT GUIDE	1.475 X 3.282 X .180	ZINC PLATED STL.	CORAL	USED AT INACTIVE STILE FOR SERIES 213 FLUSH BOLTS
32	BP380	STEEL BACK-UP PLATE/ FLUSH BOLT GUIDE	1.475 X 3.062 X .180	ZINC PLATED STL.	CORAL	USED AT INACTIVE STILE FOR SERIES 380 FLUSH BOLTS
33	BP500	STEEL BACK-UP PLATE/ FLUSH BOLT GUIDE	1.475 X 4.312 X .180	ZINC PLATED STL.	CORAL	USED AT INACTIVE STILE FOR SERIES 500FLUSH BOLTS
34	FL207	DOOR HEADER/TRANSOM BAR	1.750 X 4.500 X .085	6063-T6 ALUMINUM	CORAL	DOOR JAMB AT WALL
35	DS200	DOOR STOP	.500 X 1.019 X .050	6063-T6 ALUMINUM	CORAL	
36	DP200-1	PANIC STOP	1.323 X .402 X .188	6063-T6 ALUMINUM	CORAL	FABRICATED LENGTH = 2.00"
37	FL209	STANDARD VERTICAL MULLION/JAMB	1.75 X 4.5 X .080	6063-T6 ALUMINUM	CORAL	
38	CS104	FLAT FILLER PLATE	.265 X 3.750 X .070	6063-T6 ALUMINUM	CORAL	
39	FL203	GLASS STOP	.875 X 1.918 X .050	6063-T6 ALUMINUM	CORAL	
40	FL202	SILL/HEAD	1.75 X 4.460 X .070	6063-T6 ALUMINUM	CORAL	
41	AS16	TYPICAL SPLINE SCREW	#4 X 1" HHSTS	STEEL	VARIES	
42	DOW 795	JOINT/PERIMETER SEALANT	VARIABLE SPACE	SILICONE	TREMCO	
43	SB2	SETTING BLOCK	.800X 4.00 X .562	EPDM	VARIES	
44	AS20	FASTENER AT PANIC STOP	#10-16 X 1/2" FHP SELF DRILL	STEEL	VARIES	
45	TH4	THRESHOLD	.500 X 4.00 X .125	6063-T6 ALUMINUM	CORAL	
46	WP200	DOOR STOP WEATHERING	VARIABLE SPACE	WOOL PILE	SCHLEGEL	USED @ 35

APPROVED HARDWARE
CORAL STANDARD BUTT HINGES OR EQUAL
2086 JACKSON PANIC
MS1850X505X4015X4016 3 PT LOCK
CORAL STANDARD FLUSHBOLTS

JOSHUA M. ROYCE
LICENSE
No. 68180
STATE OF FLORIDA
PROFESSIONAL ENGINEER

Secure Electronic Seal
For Electronic Submissions

Digitally signed by: Josh Royce

REV	BY	DATE	DESCRIPTION
---	---	----	----------

Coral
Architectural Products
3010 RICE MINE ROAD, TUSCALOOSA, AL 35406
PHONE: 800-772-7737 FAX: 800-255-7320

FLORIDA PRODUCT APPROVAL
DRAWINGS SERIES 213, 380 AND 500
BUTT HUNG DOORS IN FL200
BILL OF MATERIALS AND APPROVED HARDWARE

DATE 7/7/15

DRAWN	CHECKED	APPROVED
DEG	JMR	JMR

PROJECT NO.

DRAWING NO. FL200_3

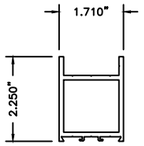

6 TOP RAIL NS213

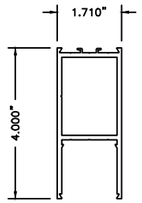

7 BOTTOM RAIL NS213; TOP RAIL SERIES 380/500

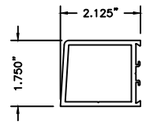

8 HING/LOCK STILE NS213

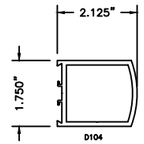

9 INACTIVE MEETING STILE NS213

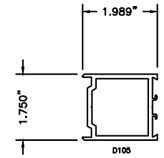

10 ACTIVE MEETING STILE NS213

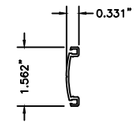

11 ADJUSTABLE ASTRAGAL

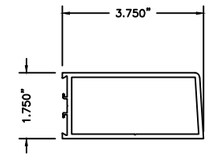

14 HINGE/LOCK STILE MS380

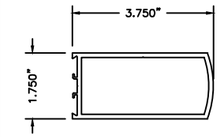

15 INACTIVE MEETING STILE MS380

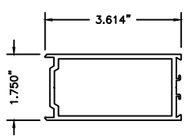

16 ACTIVE MEETING STILE MS380

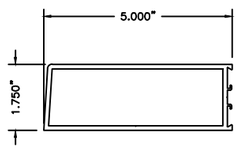

17 HINGE/LOCK STILE WS500

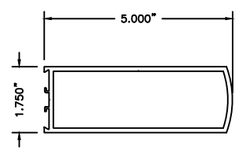

18 INACTIVE MEETING STILE WS500

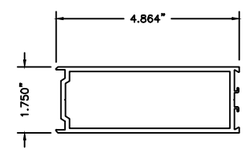

19 ACTIVE MEETING STILE WS500

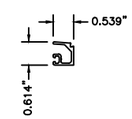

20 DOOR GLASS STOP

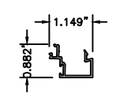

35 DOOR STOP

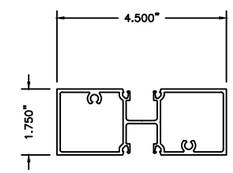

34 DOOR HEADER/TRANSOM BAR

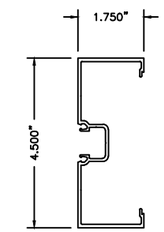

37 DOOR JAMB

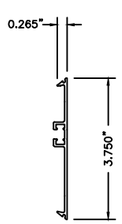

38 FLAT FILLER

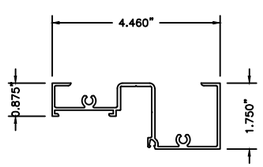

40 TRANSOM HEAD

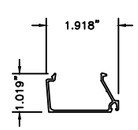

39 GLASS STOP

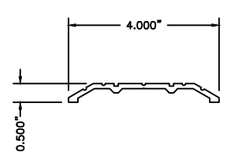

45 THRESHOLD

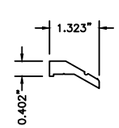

36 PANIC STOP

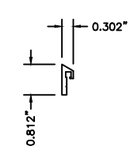

22 WEATHER SWEEP

43 SETTING BLOCK

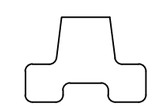

FULL SCALE

1 SETTING BLOCK

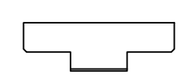

FULL SCALE

4 DOOR SWEEP WEATHERING

FULL SCALE

2 DOOR GLASS STOP WEATHERING

FULL SCALE

REV	BY	DATE	DESCRIPTION
---	---	----	----------

Coral Architectural Products
3010 RICE MINE ROAD, TUSCALOOSA, AL 35406
PHONE: 800-772-7737 FAX: 800-255-7320

FLORIDA PRODUCT APPROVAL
DRAWINGS SERIES 213, 380 AND 500
ENTRANCE DOORS IN FL200
FRAMING
DIE DRAWINGS

JOSHUA M. ROYCE
LICENSE
No. 68180
STATE OF FLORIDA
PROFESSIONAL ENGINEER

Secure Electronic Seal
For Electronic Submissions

Digitally signed by Josh Royce

DATE		
7/7/15		
DRAWN	CHECKED	APPROVED
DEG	JMR	JMR

PROJECT NO.

DRAWING NO. FL200_3

SHEET 13 OF 13